Data sheet
City

J2616

Proludic

2-6

18

0,86m

1 = 5,6m
2 = 0,8m
3 = 1,4m

Physical inclusion
Sensory inclusion
Cognitive inclusion

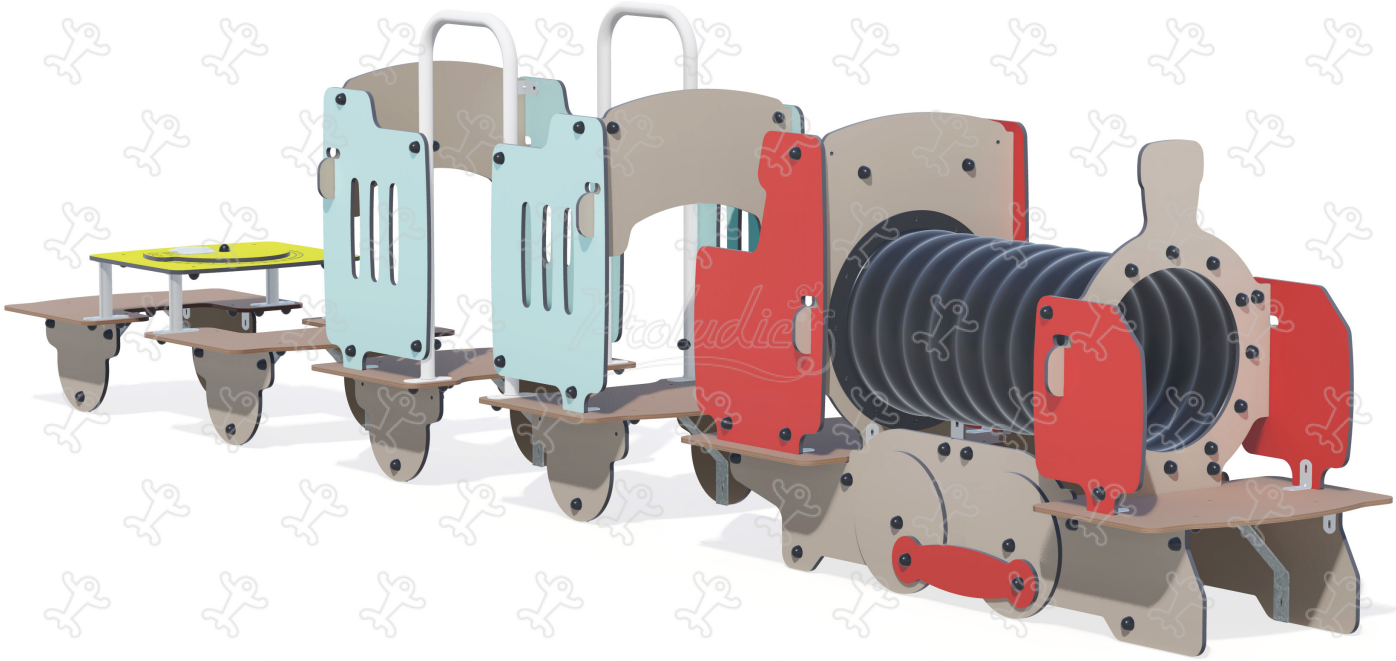

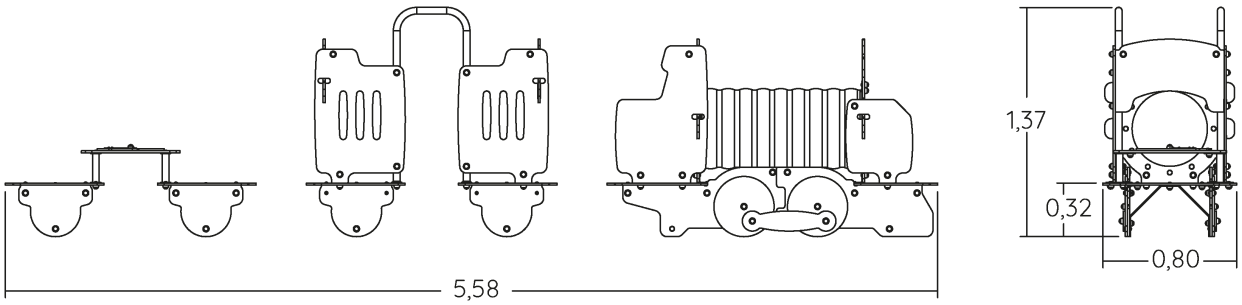

Play value : 12

role play	meeting	resting	handling	crawling	hiding	thinking
x2	x3	x3	x1	x1	x1	x1

Installation of equipment

IMPORTANT: It is essential to refer to the installation instructions for information on the size of the safety areas.

Impact area (minimum normative surface)

Free space

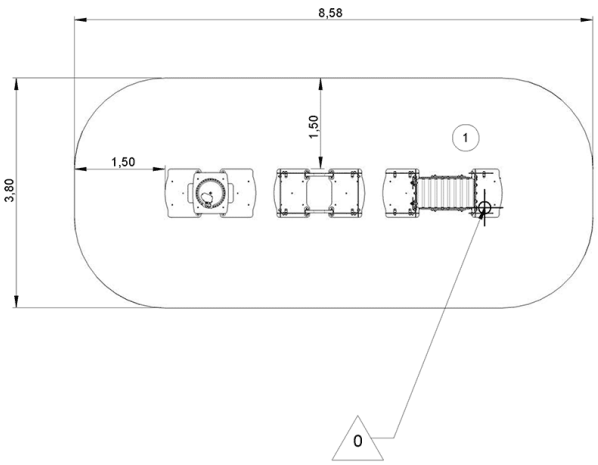

1	0,86m	30,6m²

2		0m³	30.6m²	194kg	9kg

EN 1176