PLAY EQUIPMENT SPECIFICATION SHEET

DOUBLE FLAT SWINGS

BX/HMP3 100036

Hand Made Places

SPECIFICATION:

Age Range:

5+

Unit Height (m):

3m

Minimum Use Zone (m²):

21 M2

Critical Fall Height (m):

1.4m

MATERIALS USED:

Timber

PRODUCT INFORMATION

Flat swing available with square timber frame.

DIAGRAM

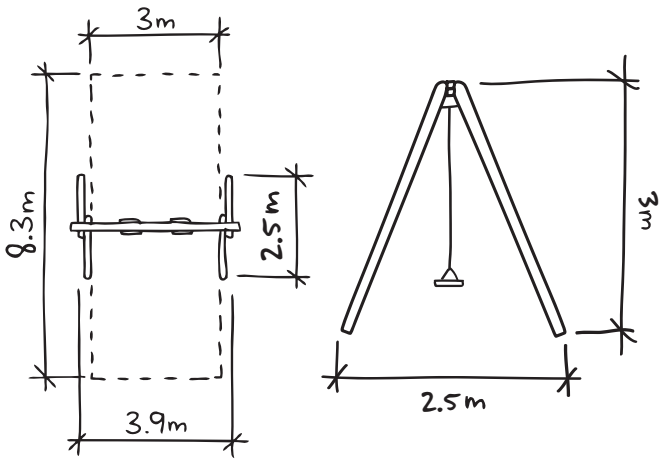

Hand Made Places, Rowhurst Industrial Estate, Chesterton, Newcastle-under-Lyme, Staffordshire, ST5 6BD T: 01420 474111 E: info@handmadeplaces.co.uk W: www.handmade-

All dimensions are in millimeters, weights in kilograms and capacities in litres, are approximate and do not form any part of the contract. All prices are guide prices only and should be used for estimating purposes only. Broxap Limited reserve the right to change the design, specification or price of any item sold at any time. All prices exclude VAT and delivery. Please Note: All information on this data sheet is subject to orientation (N,S,E,W) altitude and proximity to buildings, but is sufficient for use as general/preliminary information).